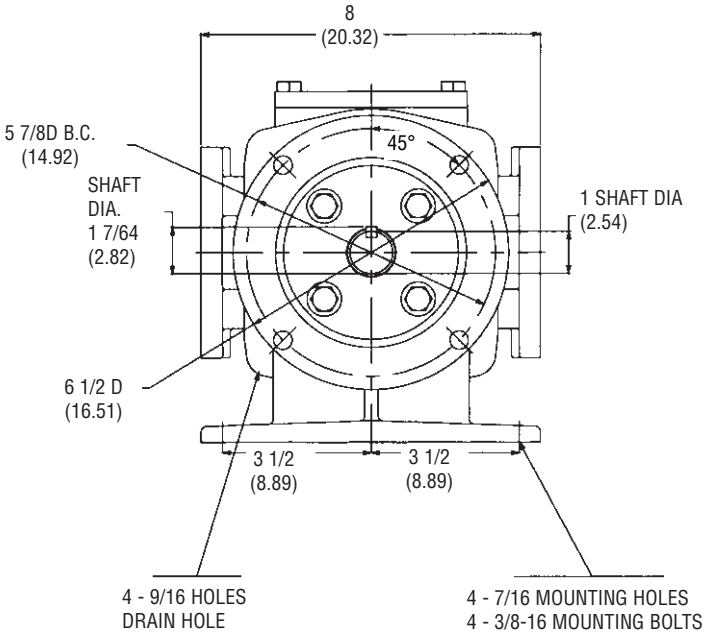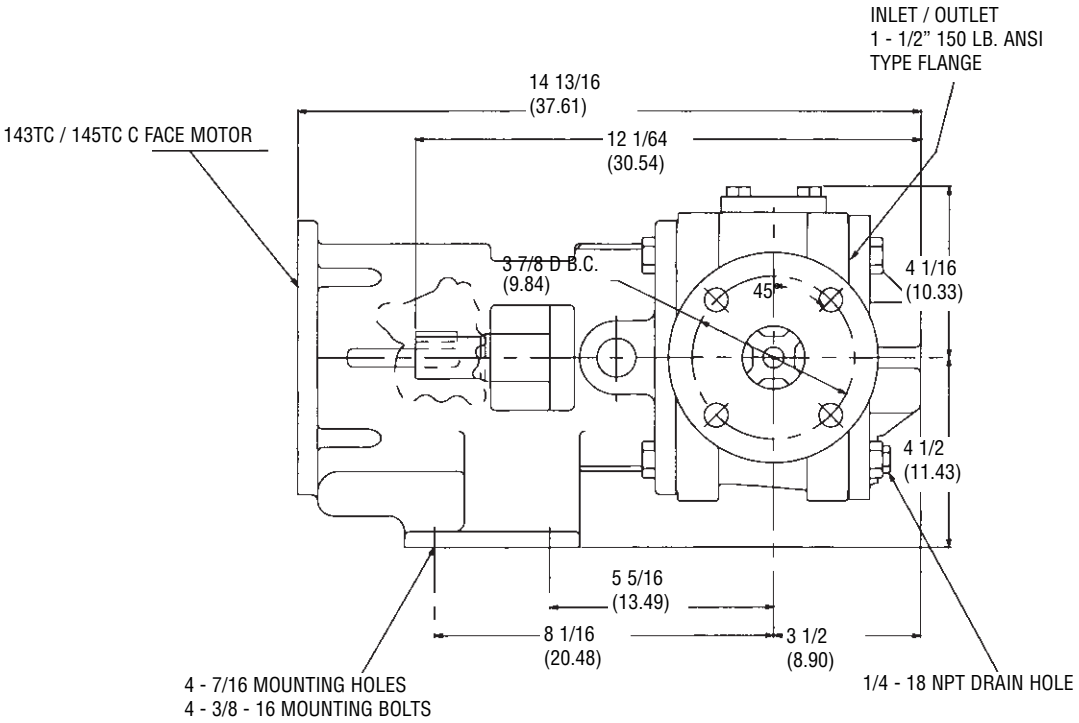OUTLINE DIMENSIONS SSV1500